Dimensions of Morse Model 15 and Model 15-SS
5-Gallon Can Tippers

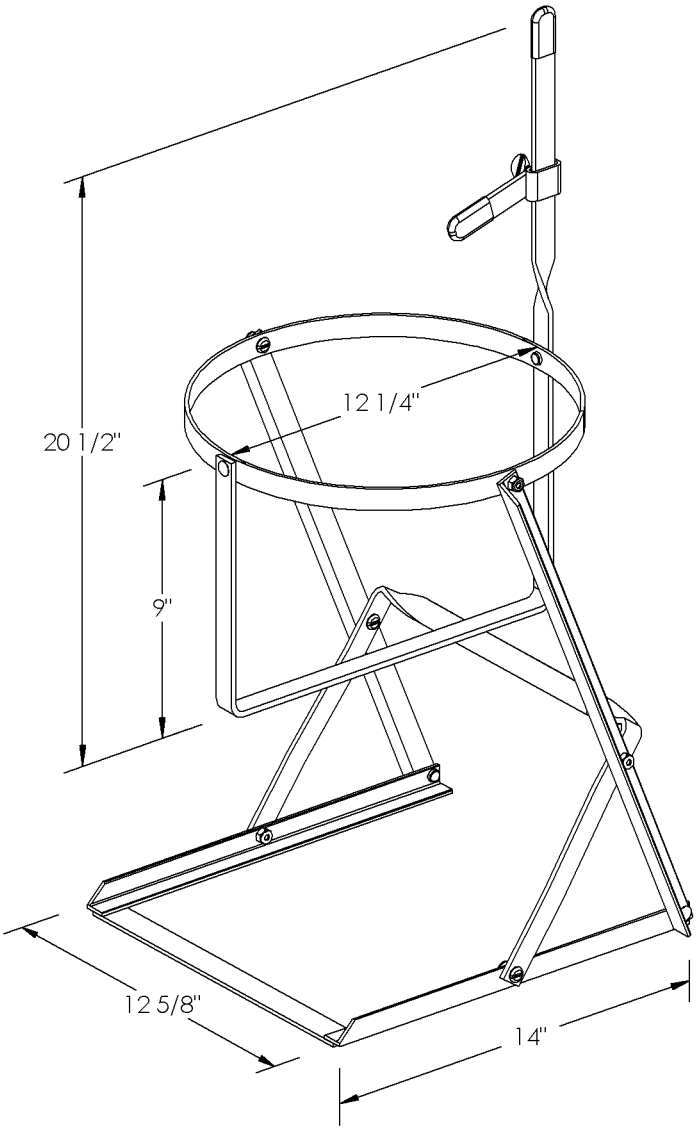

MORSE Mfg. Co., Inc. • 727 West Manlius Street • P.O. Box 518 • East Syracuse, NY 13057-0518
Phone: (315) 437-8475 • Fax: (315) 437-1029 • Email: service@MORSEmfgco.com • Website: www.MORSEmfgco.com

Copyright 2009 - Morse Mfg. Co., Inc.